HOSPIVAC® V4 / V5 / V6 - EVISA

Lubricated technology

- Multiplex central vacuum system
- Optimal space saving
- Lubricated rotary vane vacuum pumps EVISA.R type
- Dual power supply
- Pump mounted on sliding drawers
- PROCOM 2 regulation device
- FLEXO constant vacuum : regulation device allowing to use small capacity receivers
- Remote monitoring through RS485/Modbus or Ethernet connection
- Integrated HEPA parallel duplex bacterial filtration
- Fit to NF EN ISO 7396-1 and HTM BS standards
- Integrated network alarm, suction and exhaust hoses
- Exhaust condensate trap

Characteristics

HOSPIVAC® V4 / V5 / V6 EVISA lubricated pumps	Nominal capacity $m^3.h^{-1}$		Power kW		Noise level dB(A)
	50 Hz	60 Hz	50 Hz	60 Hz	
HOSPIVAC® Vx - E100.R	X x 100	X x 120	X x 2,2	X x 2,64	67
HOSPIVAC® Vx - E200.R	X x 200	X x 240	X x 4	X x 4,8	71
HOSPIVAC® Vx - E300.R	X x 300	X x 360	X x 5,5	X x 6,6	72

HOSPIVAC® V4 / V5 / V6 EVISA lubricated pumps	Filtration for			Weight kg		
	HOSPIVAC® V4	HOSPIVAC® V5	HOSPIVAC® V6	HOSPIVAC® V4	HOSPIVAC® V5	HOSPIVAC® V6
HOSPIVAC® Vx - E100.R	2 x FD320S	2 x FD600S	2 x FD600S	780	970	1070
HOSPIVAC® Vx - E200.R	2 x FD600S	3 x FD600S	3 x FD600S	1110	1385	1525
HOSPIVAC® Vx - E300.R	2 x FD600S	3 x FD600S	3 x FD600S	1200	1495	1660

Power supply

- 3-phase, 400V+N+E / 50Hz (standard)
- Other tensions and frequencies on request

CE 0459

Range complying with 93/42/CEE directive

1 Suction hoses

2 Vertical vacuum receiver

Specifications are subject to be changed without notice

MULTIPLEX vacuum plants

for medical applications

Dimensions (mm)

HOSPIVAC® V4

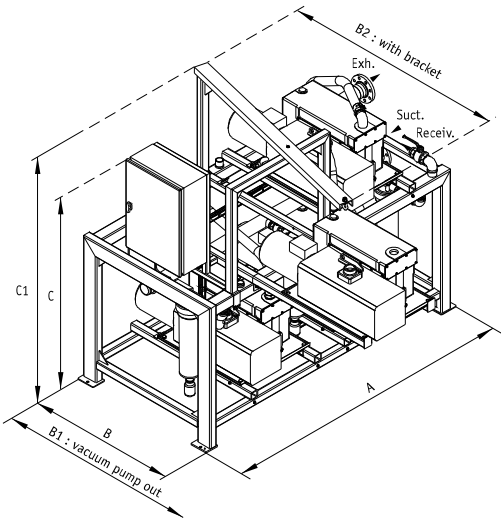

HOSPIVAC® V5 - V6

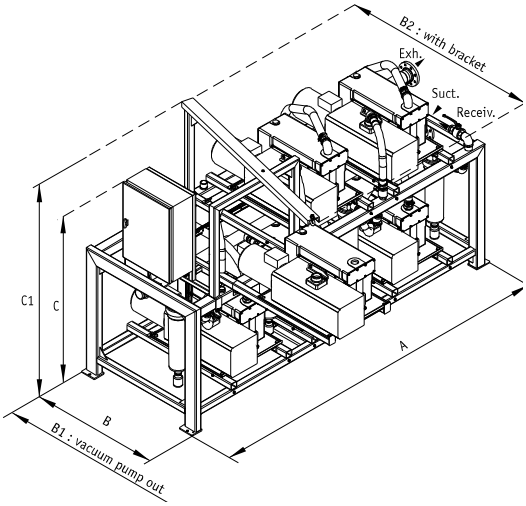

HOSPIVAC®	A	B	B1	B2	C	C1	Ø R	Ø I	Ø O
V4 - E100.R	1870	890	1720	2175	1625	1730	2"	2"	2"
V4 - E200.R / E300.R	2520	1225	2175	1740	1890	2010	2"	DN80	DN80
V5/V6 - E100.R	2390	890	1690	1375	1825	1940	2"	2"	2"
V5/V6 - E200.R / E300.R	3285	1190	2340	1890	1890	2040	2"	DN80	DN80

Plant references

HOSPIVAC® FLEXO constant vacuum regulation	E100.R	E200.R	E300.R
HOSPIVAC® V4 PM2	922664	922666	922667
HOSPIVAC® V5 PM2	922680	922682	922683
HOSPIVAC® V6 PM2	922613	922615	922616

Accessories and option references

HOSPIVAC® V4 / V5 / V6		E100.R	E200.R	E300.R
Oil level security	PM2	625369 x X	624245 x X	
Oil level + T°C securities	PM2	724954 x X	624247 x X	
Report Status (with electrical cords)	PM2	12 first alarms 625642	12 following alarms 625643	
Back up power supply 24V		with battery 625002		
Transformer 400V/230V		If no neutral available 2 x 611099		
Bracket		622815	622816	624004
Chain hoist				360280
❶ Hose to connect receiver				607592
❷ Advised receiver for running with a FLEXO constant vacuum regulation device	For V4	1 x 2000 liters 722341	1 x 2000 liters 722341	2 x 2000 liters 722341
	For V5	1 x 2000 liters 722341	2 x 2000 liters 722341	2 x 2000 liters 722341
	For V6	1 x 2000 liters 722341	2 x 2000 liters 722341	3 x 2000 liters 722341

Specifications are subject to be changed without notice